DOCUMENT RESUME

ED 071 312 EM 010 457

TITLE	Introduction to Psychology and Leadership. Part Five; Military Management. Progress Check. Test Item Pool. Segments VI, VII, VIII, IX & X, Volume II.
INSTITUTION	Naval Academy, Annapolis, Md.; Westinghouse Learning Corp., Annapolis, Md.
SPONS AGENCY	National Center for Educational Research and Development (DHEW/OE), Washington, D.C.
BUREAU NO	BR-8-0448
PUB DATE	71
CONTRACT	N00600-68-C-1525
NOTE	140p.; See also EM 010 418 and EM 010 419
EDRS PRICE	MF-$0.65 HC-$6.58
DESCRIPTORS	Autoinstructional Aids; Communication (Thought Transfer); *Criterion Referenced Tests; Individual Psychology; Leadership; *Leadership Training; *Management Education; *Military Training; *Norm Referenced Tests; Performance Tests; Programed Instruction; Psychology; Social Psychology; Tests

ABSTRACT

Test items for the introduction to psychology and leadership course (see the final reports which summarize the course development project, EM 010 418, EM 010 419, and EM 010 484) which were compiled as part of the project documentation and which are coordinated with the text-workbook on military management (EM 010 429, EM 010 430, EM 010 431, EM 010 456, and EM 010 505) are provided in this document. Progress check items with answer sheets, research pretest items, and unused items are included for criterion referenced test items, and cumulative posttest items with content references comprise research norm referenced items. EM 010 420 through EM 010 447 and EM 010 451 through EM 010 512 are related documents. (SH)

FILMED FROM BEST AVAILABLE COPY

Set #3

Contract No. N00600-68-C-1525

BR 80443

ED 021312

UNITED STATES NAVAL ACADEMY

INTRODUCTION TO PSYCHOLOGY AND LEADERSHIP

TEST ITEM POOL

PART V

MILITARY MANAGEMENT

VOLUME II

EM 010 457

Westinghouse Learning Corporation
Annapolis Division
2083 West Street
Annapolis, Maryland 21401

INTRODUCTION

The test items included in this book have been prepared for use in the course, An Introduction to Psychology and Leadership. They have been compiled as part of the project documentation. Additionally, some instructors may find them of use in preparing their own quizzes and tests. The Table of Contents on the next page indicates the classification of the test items within segments. The Progress Check answers are identified by a title page. The research pretest items are identified by the word PRE in the upper right hand corner of the page. The unused items on which there are no data are identified by their enclosure in the rectangular box. The research norm referenced test items are identified by the acronym CPT in the top right corner of each page.

For those unfamiliar with the differences between criterion referenced items and norm referenced items, the following is briefly offered. Criterion referenced items test learning of specific objectives. Students are expected to perform quite well on these items if they have adequately used the instructional materials. Their relationship to the terminal and enabling objectives are referenced for each. A norm referenced item should display more discrimination power, i.e., they are expected to reflect the distinctions between students who have depth of knowledge as opposed to those who have a superficial knowledge. Since they do more than merely test objectives, they should be used cautiously since it would not be unusual or unfavorable for a large percentage of students to choose incorrectly in answering this type of item.

TABLE OF CONTENTS (BY SEGMENTS)

A. CRITERION REFERENCED ITEMS

1. Progress Check Items

   With answer sheets and objective reference matrix.

2. Research Pretest Items

   With objective reference.

3. Unused Items

   With objective reference.

B. RESEARCH NORM REFERENCED ITEMS

1. Cumulative Post Test Items

   With content references.

ED 071312

United States Naval Academy

INTRODUCTION TO PSYCHOLOGY AND LEADERSHIP

PART FIVE

MILITARY MANAGEMENT

Segment VI

Organization: Structure

Progress Check

U.S. DEPARTMENT OF HEALTH, EDUCATION & WELFARE
OFFICE OF EDUCATION
THIS DOCUMENT HAS BEEN REPRODUCED EXACTLY AS RECEIVED FROM THE PERSON OR ORGANIZATION ORIGINATING IT. POINTS OF VIEW OR OPINIONS STATED DO NOT NECESSARILY REPRESENT OFFICIAL OFFICE OF EDUCATION POSITION OR POLICY

WESTINGHOUSE LEARNING CORPORATION

Annapolis, Maryland

1971

ORGANIZATION: STRUCTURE

PROGRESS CHECK

Question 1.

Which of the following correctly describes the purpose of structure?

a. Structure provides for the division of work, assignment of authority and the establishment of authority relationships within an organization.

b. Structure provides organizational objectives around which an organization is formulated. Thus, the organization can function in a self-sufficient and self-supporting manner.

c. Structure is the basic shaping of an organization according to a pattern, thereby allowing only a pre-determined order or system of hierarchy to develop.

d. Structure is the basic foundation of an establishment which has certain basic policies, both written and unwritten. It prevents development of a set hierarchy within the organization.

Question 2.

Which of the following statements correctly compares and contrasts line, line and staff, and functional structures?

a. Both line, and line and staff are the formal types of structures in an organization; functional structure in an organization is the informal structure.

b. Line, line and staff, and functional structures are each formal type structures. Each is based on authority and responsibility; line is the authority, staff is responsible, and functional is supportive.

c. Line structures group those components of an organization which are directly responsible for the accomplishment of a mission into an unbroken line of authority. Line and staff structures combine line elements with those staff elements furnishing technical guidance and services in specialized areas. Functional structures group components which have similar functions, regardless of line and/or staff affiliations, for the purpose of accomplishing a specific task.

d. Although line, line and staff, and functional structure derive their authority from the same source, line has more authority than functional, and functional has more authority than staff.

Question 3.

Which is a correct statement about line structure?

a. Line structure supplements staff units. The line structure is formulated such that it can provide recommendations and service, technical assistance and guidance.

b. Line structure is the basic hierarchy of elements which provides an unbroken chain of authority within the command, and which contributes directly to accomplishing the primary objectives of the command.

c. Line structures are additional units within the organizational structure. Their service is to provide special services to the mission.

d. "Departmentation" is another term often used synonymously with line structure.

Question 4.

Which of the following descriptions of organizational structure describes a line and staff structure?

a. The Medical Officer aboard ship cannot go directly to a command department head and direct him to provide leave for certain personnel for medical reasons. He must address his request to the Executive Officer instead.

b. Each large division aboard ship has a division officer, a junior division officer, and a division training officer. Each of these individuals reports directly to the department head.

c. The Medical Officer heads the Medical Department and represents the CO in all matters pertaining to the Medical Department. All medical officers, even those assigned to squadrons as flight surgeons, report to him in the performance of their duties.

d. The Reenlistment Officer of a command oversees the command's reenlistment program. Reenlistment petty officers (career counselors) from each division carry out the program of the Reenlistment Officer, reporting directly to him in regard to their duties in the program, and they meet with him periodically.

Question 5.

Select the statement which identifies the main objective of staff departments.

a. Staff departments have responsibility for most functions directly related to the mission.

b. Staff departments provide technical recommendations which must be followed by the line officers.

c. Staff departments provide recommendations and service, technical assistance, and guidance.

d. Staff departments are responsible for the supervision of line officers in the performance of mission functions.

Question 6.

Select the description of an organizational structure which describes functional structure.

a. It is an organization in which the Medical Officer acts in an advisory capacity to the Commanding Officer in matters pertaining to sanitation and hygiene.

b. It is an organization in which the Marine Detachment Commanding Officer has a dual role: as a division officer in the Weapons Department, and in a somewhat similar position to a department head with respect to the administration of the Marines aboard.

c. It is an organization in which the Weapons Officer is responsible for the maintenance, storage, and operation of various caliber weapons throughout the ship.

d. It is an organization in which the Damage Control Assistant in the Engineering Department supervises watertight and airtight closure of doors, hatches, ports, ventilating piping, and drainage systems throughout the ship.

Question 7.

Which of the following statements best defines functional structure?

a. An organization structure which reflects both common goals and motivations of group members irrespective of the formal structure and the differentiation likely within a large command.

b. An organization structure created to stimulate better management by use of leaders who realize the formal organization will not fully accomplish the mission.

c. An organization structure where functional supervisors give orders to line personnel in matters concerning a particular function and see that these orders are carried out.

d. An organization structure having more authority than either line or staff structures; it maintains control through policies and directives.

PROGRESS CHECK ANSWER AND REMEDIATION FORM

PART Five SEGMENT VI

REMEDIATION TEXT Linear Text - Volume V-A

ITEM	ANSWER	REMEDIATION REFERENCE
1	a	Pages 1-2
2	c	Pages 4-5, 7-8; 11-12
3	b	Pages 4-6
4	a	Pages 7-10
5	c	Pages 7-8
6	d	Pages 11-12
7	c	Page 11
8		
9		
10		
11		
12		
13		
14		
15		

PROGRESS CHECK ITEM AND OBJECTIVE MATRIX

MARCH 1971

Part Five Segment VI

ITEM NO.	T. O.	E. O.
1	1	
2	2	
3	3	2
4	4	
5	4	2
6	5	
7	5	1
8		
9		
10		

Question 80.

Which of the following statements correctly describes the characteristics of a good line structure?

a. The head of each organizational component has complete responsibility for all functions required to accomplish the mission and the structure is based on authority and responsibility.

b. This structure does not require additional clarity of authority and responsibility even though the supervisor has power over specified functions or activities undertaken by personnel in departments other than his own.

c. Good line structure deletes the need for technical guidance and service to be furnished by the staff structure.

d. Good line structure is based on the nature of the various functions performed by the command, with each person reporting to one supervisor.

Ans. a, Ref. 5.6, TO-3/EO-2

Question 29.

Which of the following statements correctly describes the characteristics of functional structure?

a. The main objective of functional structure is to provide recommendations and service, technical assistance and guidance. Each person within this structure reports to one supervisor.

b. The supervisor acts as an executive in charge of functions and provides both direct line supervision and the services of specialists. This structure requires clarity of authority and responsibility.

c. Functional structure is not a planned structure but rather develops without any predetermined pattern. It consists of groups interrelated in a complex manner.

d. Within the functional structure, the supervisor has complete responsiblity for all functions required to accomplish the mission, excluding those undertaken by personnel in departments other than his own. Functional structure is based on authority and responsibility.

Ans. b, Ref. 5.6, TO-5/EO-2

PART 5 SEGMENT VI

T. O. Number	TEST ITEM
1	Which of the following best describes the purpose of structure? a. The purpose of structure can be social interaction, to solve problems or to accomplish tasks. b. The purpose of structure is to serve as the organizing frame of reference which components of an organization arrange themselves. c. The purpose of structure is to ensure that the effort of those personnel working to accomplish a particular mission are most effectively utilized. d. The purpose of structure is to group similar tasks in a framework that most effectively directs the interrelations of those performing the tasks. Answer: b

REVISION_____DATE:

T. O. Number	TEST ITEM
2	Select the statement which compares and contrasts formal structures (line, line and staff, and functional). a. The line consists of those elements contributing directly to accomplishing the primary objectives of the command. The line may be supplemented by staff elements which furnish technical guidance and service in specialized areas. Functional structures are often organized within a line and staff structure to provide a special service to the mission. b. A line structure is the only one of the three formal structures which derives its authority from the commanding officer. Staff and functional structures derive their authority from the executive officer. c. The staff units supplement the line units in a line and staff organization and take precedence in the staff structure. Functional structure is based on a special service being provided to the mission. d. The functions performed by the functional structure are supervised by the line who reports to the line and staff structure. Answer: a

REVISION_____DATE:

T. O. Number	TEST ITEM
5	From the following descriptions of organizational structures, select the one which describes the functional structure. a. It is an organization in which the head of the medical department acts in an advisory capacity to the commanding officer in matters pertaining to sanitation and hygiene. b. It is an organization in which the Marine detachment commanding officer has a dual role: as division officer of the weapons department, and in a somewhat similar position to a department head with respect to the administration of the marines aboard. c. It is an organization in which the communication officer in the operations department is responsible for visual and electronic communications, and for the administration of related internal systems of communication. d. It is an organization in which the damage control assistant in the engineering department enforces watertight and airtight closure of doors, hatches, ports, ventilating piping, and drainage systems over the ship. Answer: d
REVISION_____DATE:	

T. O. Number	TEST ITEM
4	In which of the following are a line and staff structure indicated? a. In an engineering department, the line officer is setting up a temporary supply room for a particular maneuvering project. He is consulting with the supply officer who has submitted plans feasible for quick supply access. b. The commanding officer of a CA has his division officers reporting to their department heads. The department heads are responsible to the commanding officer through the executive officer. Some divisions are divided into sections. The sections' leading petty officers report to the division officers. c. Both a. and b. d. Neither a. nor b. Answer: a

REVISION_____DATE:

PART 5 SEGMENT VI

T. O. Number	TEST ITEM
1	Which of the following correctly describes the purpose or function of structure? (a) Structure is the organizing frame of reference by which components of an organization arrange themselves in the form of a ranking, a communication net, or a group chain of command. (b) Structure is the basis of and the manner in which an organization is formulated such that it can function in a self-sufficient and self-supporting manner. (c) Structure is the basic shaping of an organization according to a pattern, thereby allowing only a pre-determined order or system of hierarchy to develop. (d) Structure is the basic foundation of an establishment which has certain basic policies, both written and unwritten, and guaranteeing a set hierarchy within the organization. answer: a

REVISION_____DATE:

T. O. Number	TEST ITEM
3 (E.O. 2)	Which of the following statements is a correct statement about line structure? (a) Line structure supplements staff units. The line structure is formulated such that it can provide recommendations and service, technical assistance and guidance. (b) Line structure is the basic hierarchy of elements which provides an unbroken chain of authority within the command, and that contributes directly to accomplishing the primary objectives of the command. (c) Line structures are additional units within the organizational structure. Their service is to provide special services to the mission. (d) "Departmentation" is another term often used synonymously with line structure. answer: b

REVISION_____DATE:

PART 5 SEGMENT VI

T. O. Number	TEST ITEM
4 E.O. 1	Which of the following statements correctly defines line and staff structure? (a) Line elements furnish technical guidance and services in specialized areas and staff elements perform the functions directly related to the mission. (b) Examples of line structures are Personnel and Supply, while examples of staff structure are Navigation, Weapons, and Engineering. (c) Although the authority for line and staff is derived from the same source, line structure serves to supplement staff units. (d) Line elements perform the functions directly related to the mission, and staff elements furnish technical guidance and services in specialized areas. answer: d

REVISION_____DATE:

PART 5 SEGMENT VI

T. O. Number	TEST ITEM
4 E.O. 2	Which of the following statements best identifies the main objective of staff departments? (a) To provide those elements that contribute directly to accomplishing the primary objectives of the command. (b) To provide recommendations, service, technical assistance and guidance. (c) To provide special services which fill the gaps in the formal structure. (d) To provide additional channels of communication and to complete all required paperwork for the command. answer: b

REVISION_____DATE:

PART 5 SEGMENT VI

T. O. Number	TEST ITEM
4 EO-2	Select the statement which identifies the main objective of staff departments. a. Staff departments have responsibility for most functions directly related to the mission. b. Staff departments provide technical recommendations which must be followed by the line officers. c. Staff departments perform specialized functions and provide services related to the mission. d. Staff departments are responsible for the supervision of line officers in the performance of mission functions. Answer: c

REVISION_____DATE:

PART 5 SEGMENT VI

T. O. Number	TEST ITEM
2	Select the statement which compares and contrasts formal structures (line, line and staff, and functional). a. The line consists of those elements contributing directly to accomplishing the primary objectives of the command. The line may be supplemented by staff elements which furnish technical guidance and service in specialized areas. Functional structures are often organized within a line and staff structure to provide a special service to the mission. b. A line structure is the only one of the three formal structures which derives its authority from the commanding officer. Staff and functional structures derive their authority from the executive officer. c. The staff units supplement the line units in a line and staff organization and take precedence in the staff structure. Functional structure is based on a special service being provided to the mission. d. The functions performed by the functional structure are supervised by the line who reports to the line and staff structure. Answer: a

REVISION_____DATE:

Question 4.

Which of the following description is the BEST example of line and staff structure?

a. A Marine combat battalion is assigned the mission of interdicting infiltration of enemy forces through a demilitarized zone. The Battalion Commander maintains tight control of the companies under his command and is in constant contact with company commanders who are, in turn, expected to maintain contact and control with their platoon leaders.

b. The line officer of a public information department is charged with the responsibility of providing technical information to local newspapers about a forthcoming display of naval aircraft, and to publicize this display. He consults with base security and operations officers to determine details of the publicity.

c. The commanding officer of an electronic surveillance ship is assigned the task of providing backup signal detection capability for a space mission. While assigning direct lines of responsibility for monitoring of the appropriate frequencies, he consults with a number of communications experts who collect the necessary equipment or modify existing equipment to assure the success of the mission.

d. None of the above

Answer: c Ref: VI-B.2.

United States Naval Academy

INTRODUCTION TO PSYCHOLOGY AND LEADERSHIP

PART FIVE

MILITARY MANAGEMENT

Segment VII

Organizing: Charting

Progress Check

WESTINGHOUSE LEARNING CORPORATION

Annapolis, Maryland

1971

ORGANIZING: CHARTING

PROGRESS CHECK

Question 1.

Select the statement which correctly describes the purposes of organization charts.

a. Organization charts clearly show lines of authority; portray the formal organization; facilitate understanding of difficult informal relationships.

b. Organization charts are tools to assist management; portray the formal organization; show how the organization actually operates.

c. Organization charts portray the formal organization; facilitate understanding of difficult informal organizational concepts; clearly show lines of authority.

d. Organization charts clearly show lines of authority; are tools to assist management; portray the formal organization.

Question 2.

Which of the following statements best describes the limitations of organization charts as far as "real" versus "portrayed" organization is concerned?

a. They show structure, chain of command, and actual operation, but not the human element involved in management.

b. They show structure, the human element in management, and the chain of command, but not the actual operation.

c. They show structure and chain of command, but neither the human element involved, nor the actual operation.

d. They show structure, but not the human element in management, the chain of command, or the actual operation.

Question 3.

Select the statement which correctly describes the influence of organization charts on the quality of the organization itself and the quality of management.

a. Organization charts will insure a good formal organization, and provide insight into the formal organization. They have no effect on management.

b. Organization charts only provide insight into the formal organization. They do not insure either a good formal organization or good management.

c. Organization charts provide insight into the formal organization and insure good management. They do not insure a good formal organization.

d. Organization charts insure a good formal organization and good management. They provide no insight into the formal organization.

Question 4.

Which of the following items correctly lists types of charts in the following order: structural, functional, billet assignment, combination?

a. Ship's organization; personnel assigned; deck division duties; organization and functions.

b. Organization and functions; deck division duties; personnel assigned; ship's organization.

c. Ship's organization; deck division duties; organization and functions; personnel assigned.

d. Ship's organization; deck division duties; personnel assigned; organization and functions.

Question 5.

Which of the following statements correctly lists the characteristics of structural charts?

a. Structural charts show the structure of an organization, are relatively independent of organization size, and indicate interrelationships of functions.

b. Structural charts show the structure of an organization, show basic relationships among components, and can show functions as well as structures.

c. Structural charts show the structure of an organization as well as the functions, show basic relationships among components, and are relatively independent of organization size.

d. Structural charts show the structure of an organization, are relatively independent of organization size, and show basic relationships among components.

Question 6.

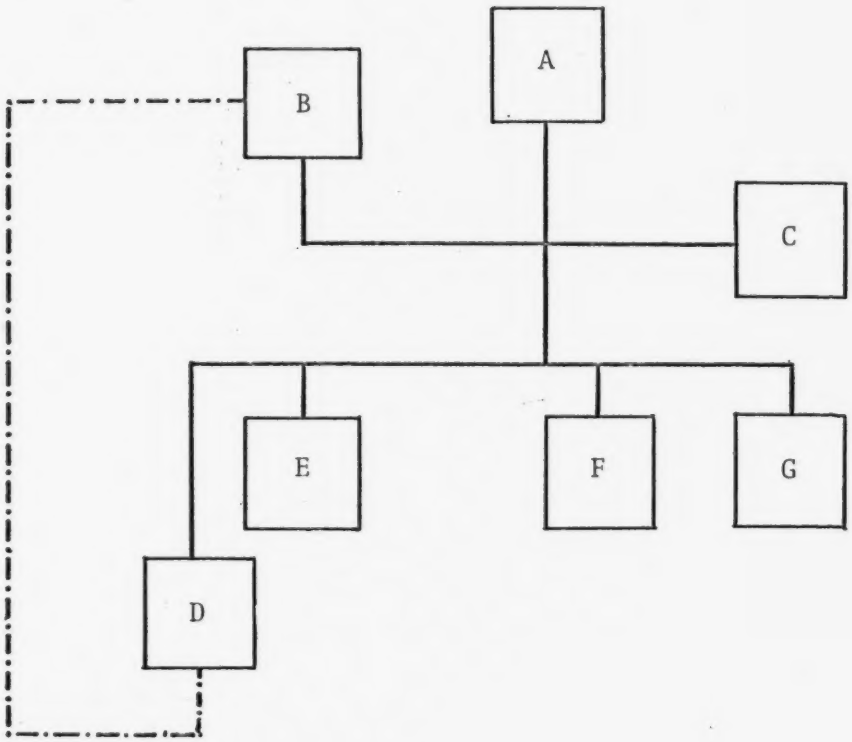

The chart above lacks one characteristic of a good organization chart. Identify the missing characteristic.

a. Simplicity

b. Clarity

c. Symmetry

d. Unity

Question 7.

One of the characteristics of a good organization chart is completeness.

Which of the following shows the requirement(s) to make a chart complete?

a. The chart must show all components of the organization and their relationships to other organizations.

b. The chart must be verified as accurate and current, indicate the date prepared and carry with it the signature of the Commanding Officer.

c. The chart must identify all components involved and show their relationships.

d. Both b and c above

Question 8.

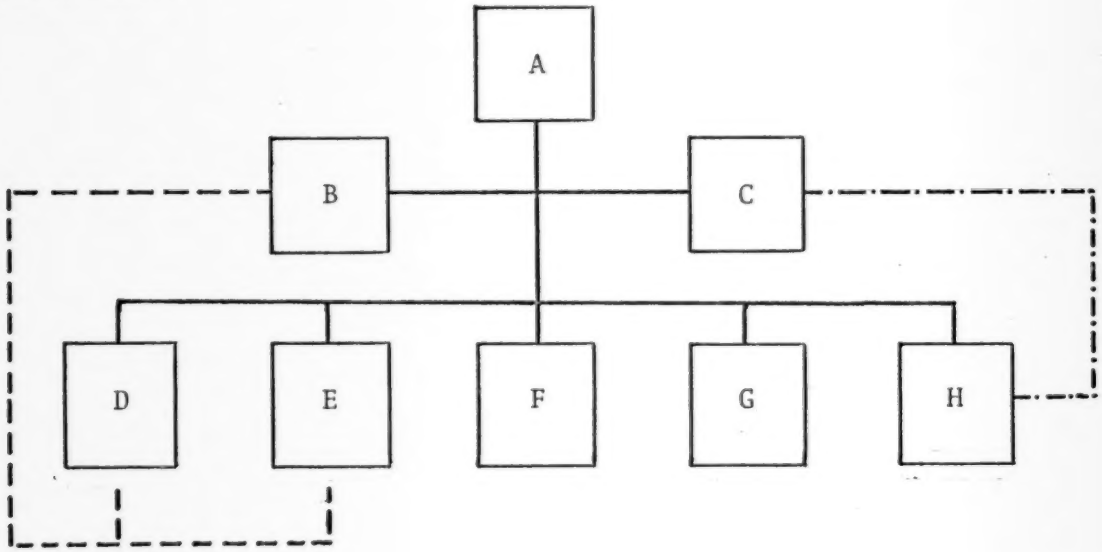

Which of the following statements best describes the chart above?

a. B has a staff (advisory) relationship to D and E. C functions part-time as H.

b. B has functional authority over D and E. C has a staff (advisory) relationship to H.

c. B functions part-time as D and E. C has a staff (advisory) relationship to H.

d. B has a staff (advisory) relationship to D and E. C has functional authority over H.

Question 9.

A check list should be used to ensure proper development of a good organization chart.

Which of the following questions would not be included in such a check list?

a. Is standard terminology used?

b. Are all components included?

c. Are functions adequately described?

d. Does the chart satisfy all potential users?

Question 10.

Which type of organization chart is shown below?

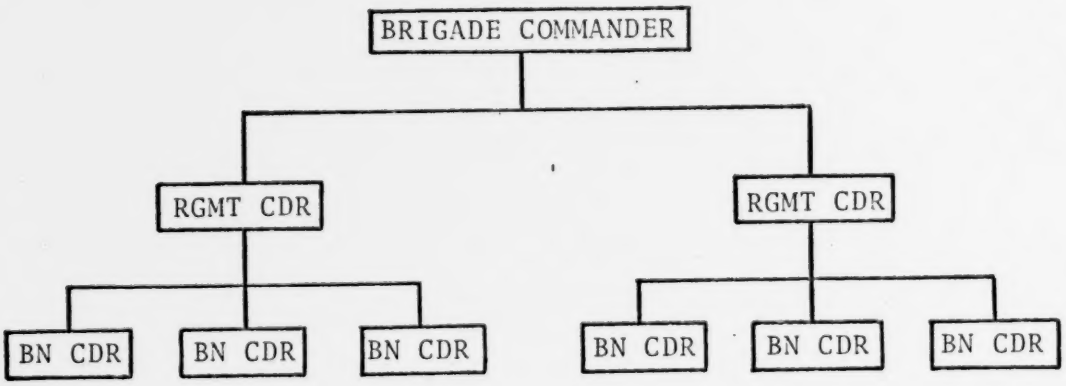

a. Structural

b. Functional

c. Billet assignment or position

d. Combination

PROGRESS CHECK ANSWER AND REMEDIATION FORM

PART Five SEGMENT VII

REMEDIATION TEXT Audio Script - Volume V-B

ITEM	ANSWER	REMEDIATION REFERENCE
1	d	Pages 1-2
2	c	Pages 1-2
3	b	Page 2
4	d	Pages 2-4
5	d	Pages 2-4
6	c	Pages 4-7
7	d	Pages 4-5
8	d	Pages 6-8
9	d	Page 8; also page 24 (HAPB)
10	a	Pages 2-4
11		
12		
13		
14		
15		

PROGRESS CHECK ITEM AND OBJECTIVE MATRIX

MARCH 1971

Part Five Segment VII

ITEM NO.	T. O.	E. O.
1	1	1
2	6	2
3	6	1
4	4	
5	4	1
6	3	
7	3	1
8	2	
9	5	
10	4	

Question 55.

Each of the items below lists a single characteristic of each of four types of charts.

Select the item which correctly lists the characteristics of the charts in the following order: structural chart, functional chart, billet assignment or position chart, combination chart.

a. Helps outline basic relationships among components; can show functions as well as structure; shows names and titles/grades of personnel; indicates interrelationships of functions

b. Indicates interrelationships of functions; helps outline basic relationships among components; shows names and titles/grades of personnel, can show structure as well as functions

c. Helps outline basic relationships among components; indicates interrelationships of functions; shows names and titles/grades of personnel; can show functions as well as structure

d. Shows titles or grades and names of personnel; indicates interrelationships of functions; helps outline basic relationships among components; can show structure as well as functions

Ans. c, Ref. 5.7, TO-2/EO-1

PART 5 SEGMENT VII

T. O. Number	TEST ITEM
1	Which of the following statements regarding the purposes and limitations of organization charts is correct? a. Organization charts clearly show lines of authority and responsibility and help to recognize flaws in the organization; but, do not show how an organization actually operates. b. Organization charts portray the formal organization and provide a basis for planning; but, do not insure good management. c. Both of the above. d. None of the above. Answer: c..

REVISION_____DATE:

PART 5 SEGMENT VII

T. O. Number	TEST ITEM
1 (EO-1)	Which of the following best summarizes the purposes of organization charts? a. Charts determine lines of authority and responsibility in an organization. b. Charts are tools that help to picture an organization, and formal relationships between parts of the organization. c. Charts insure that the formal structure of the organization will be designed to fulfill its mission most effectively. d. Charts give insight into how an organization really functions. Correct answer: b

REVISION_____DATE:

T. O. Number	TEST ITEM
4	Four types of scalar charts were discussed in the lesson on charting. Each of the items below lists a single characteristic of each type. Select the item which lists these characteristics in the following order: structural, functional, billet, combination. a. Helps outline basic relationships among components; can show functions as well as structure; shows names and titles/grades of personnel; indicates interrelationships of functions. b. Indicates interrelationships of functions; helps outline basic relationships among components; shows names and titles/grades of personnel, can show structure as well as functions. c. Helps outline basic relationships among components; indicates interrelationships of functions; shows names and titles/grades of personnel; can show functions as well as structure. d. Shows titles or grades and names of personnel; indicates interrelationships of functions; helps outline basic relationships among components; can show structure as well as functions. Answer: c.
	REVISION_____DATE:

PART 5 SEGMENT VII

T. O. Number	TEST ITEM
4 (EO-1)	Which of the following statements correctly lists the characteristics of structural charts? a. Structural charts show the structure of an organization, are relatively independent of organization size, and indicate interrelationships of functions. b. Structural charts show the structure of an organization, show basic relationships among components, and can show functions as well as structure. c. Structural charts show the structure of an organization as well as the functions, show basic relationships among components, and are relatively independent of organization size. d. Structural charts show the structure of an organization, are relatively independent of organization size, and show basic relationships among components. Answer: d.
	REVISION_____DATE:

PART 5 SEGMENT VII

T. O. Number	TEST ITEM
3 (EO-3)	One of the characteristics of good organizational charts is Clarity. Which of the following show the requirement(s) to insure clarity? a. Boxes should be clearly labeled,and short explanatory notes may be necessary. b. Lines should not cross, and abbreviations should seldom be used. c. Both of the above. d. None of the above. Answer: c.
	REVISION_____DATE:

T. O. Number	TEST ITEM
3 (EO-5)	Which of the diagrams below displays the characteristic of organization charts known as Unity?

a.

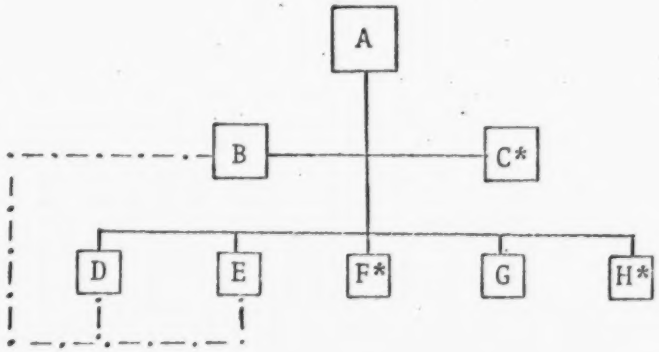

b.

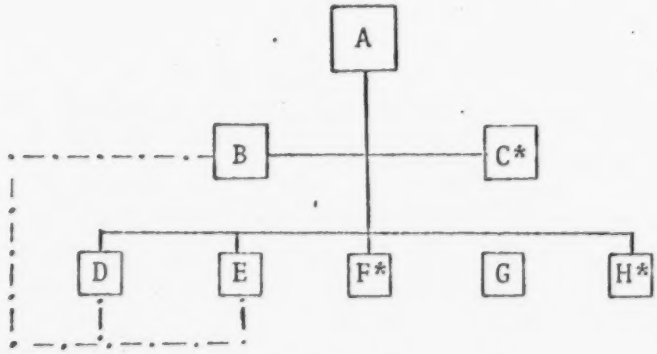

c. Both of the above.

d. None of the above.

Answer: a.

REVISION_____DATE:

T. O. Number	TEST ITEM
4	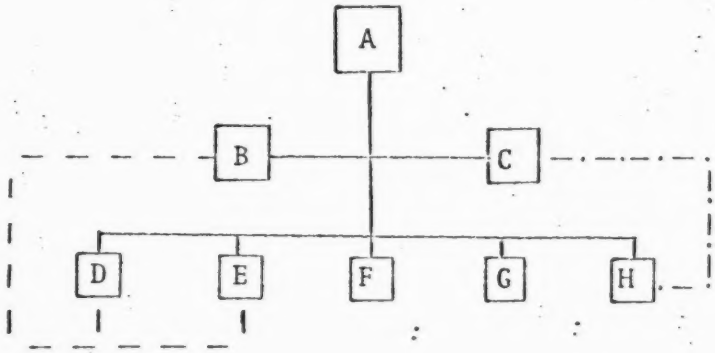 Which of the following statements best describes the chart above? a. B has a staff (advisory) relationship to D and E. C functions part-time as H. b. B has functional authority over D and E. C has a staff (advisory) relationship to H. c. B functions part-time as D and E. C has a staff (advisory) relationship to H. d. B has a staff (advisory) relationship to D and E. C has functional authority over H. Answer: d.

REVISION_____DATE:

PART 5 SEGMENT VII

T. O. Number	TEST ITEM
2 (EO-1)	Select the statement below which is correct concerning the construction of organization charts. a. Units of equal authority should be on the same horizontal plane. b. When portraying lines of authority, smaller boxes should be used for subordinate units. c. Diagonal lines should not be used to connect boxes. d. All of the above. Answer: d.

REVISION_____DATE:

PART 5 SEGMENT VII

T. O. Number	TEST ITEM
2 (EO-1)	Which of the following groups of questions may properly be used to ensure the development of good organization charts? a. Are existing levels and lines of authority/responsibility shown? Are all components included? Does the chart show which are staff and which are operating components? b. Is standard terminology used? Have future changes been indicated? Are functions adequately described? Are purposes and objectives of the command indicated? c. Both of the above. d. None of the above. Answer: c.
	REVISION_____DATE:

PART 5 SEGMENT VII

T. O. Number	TEST ITEM
2 (EO-1)	A check list should be used to ensure proper development of a good organization chart. Which of the following questions would not be included in such a check list? a. Is standard terminology used? b. Are all components included? c. Have future changes been indicated? d. Does the chart satisfy all potential users? Answer: d.

REVISION_____DATE:

PART 5 SEGMENT VII

T. O. Number	TEST ITEM
3	The Supply Officer of a ship has promulgated the organization chart showing the various functions of his department. What criticisms should be made concerning his presentation?

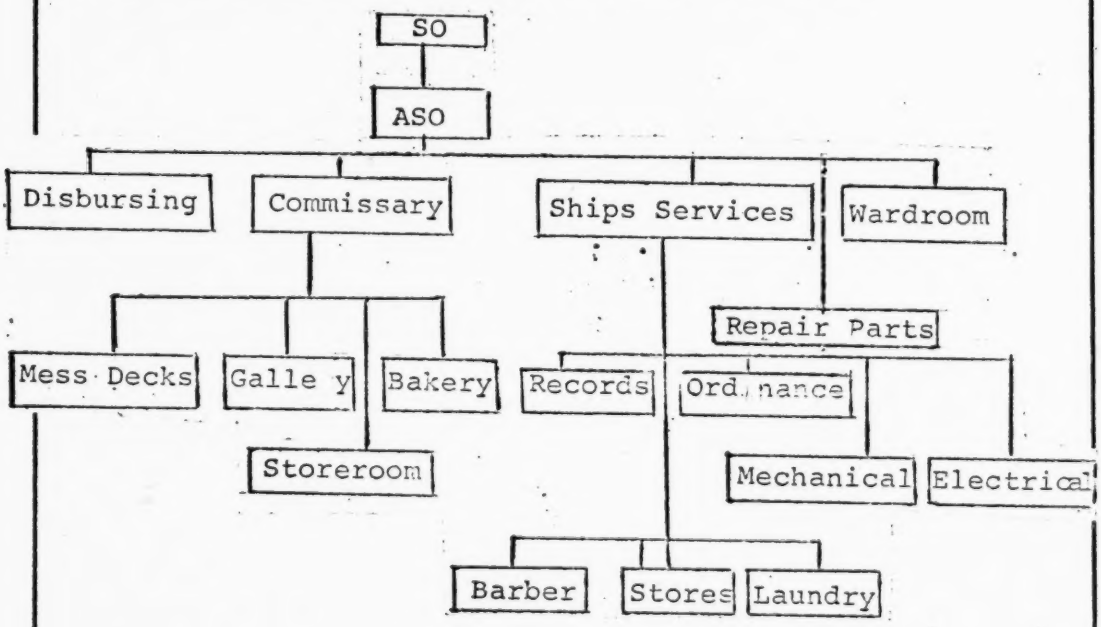

a. Crossed or diagonal lines

b. Staggered sub-divisions

c. both (a) and (b)

d. none of the above

Correct answer: c

REVISION_____DATE:

Question 18.

Which of the following are features of good organization charts?

a. Structured, simple, specific, and symmetrical

b. Complete, functional, simple, and clear

c. Structured, functional, clear, and symmetrical

d. Complete, simple, clear, and symmetrical

Answer: d Ref: VII.C.1.

Question 16.

Which of the following is neither indicated nor ensured by an organization chart?

1) Establishment of relationships among the various organizational activities

2) The human element involved in management

3) The determination of manpower assignments

4) The recognition of flaws in the organization structure

5) Good formal organization

6) Establishment of good managing

a. 1, 3 and 6

b. 2, 5 and 6

c. 1, 3 and 5

d. 3, 5 and 6

Answer: b Ref: VII.F.

Question 15.

Which of the following should the leader recognize as inherent limitations and weaknesses in organization charts?

a. Organization charts often fail to portray the command relationships existing among subordinate elements of a command.

b. A ship's organization charts will not specifically delineate line from staff components.

c. An organization chart will not provide insight into the formal organization.

d. While charts portray the formal chain of command, they do not show how the organization actually operates.

Answer: d Ref: VII.F.2.

United States Naval Academy

INTRODUCTION TO PSYCHOLOGY AND LEADERSHIP

PART FIVE

MILITARY MANAGEMENT

Segment VIII

Directing

Progress Check

WESTINGHOUSE LEARNING CORPORATION

Annapolis, Maryland

1971

DIRECTING

PROGRESS CHECK

Question 1.

Select the statement which identifies the importance of directing to a military leader.

a. Directing is important because military leaders have to issue orders.

b. Directing is important because of the impossibility of foreseeing all contingencies in planning.

c. Directing is important because it activates a plan towards accomplishment of objectives.

d. Directing is important because it is a dynamic function that activates the achieving of objectives by motivating proper planning.

Question 2.

Select the correct definition of directing.

a. The process of issuing directives (oral or written)

b. The process of converting plans into purposeful action

c. The process of interpreting orders

d. The initial phase of program development

Question 3.

Which of the following is necessary for creating a proper environment for directing?

a. Creation of a friendly atmosphere

b. Explanation of reasons and purposes of directions

c. Installation of a spirit of obedience regardless of the reasons or purposes of the direction

d. All of the above

Question 4.

The Operations Officer has heard that one of his Division Officers has created much dissatisfaction among his men because of a tendency to over-direct.

Other symptoms of over-directing might be:

a. Subordinates will take more pride in their work because of the close supervision.

b. Subordinates will set their own standards higher than those established by the leader.

c. Subordinates most likely will lose the sense of challenge they would have in implementing new directives.

d. Subordinates loyalty to organization will be increased because they know their leader cares.

Question 5.

The commander of a specialized office was correct in his assumption that his men were highly intelligent and well trained. He then followed a laissez-faire leadership pattern which caused each section of his office to operate independently.

What is the implication of this type of directing?

a. Office objectives may become fragmented and uncoordinated.

b. Poor communication may impair operation.

c. Creativity may be stifled.

d. Loyalty may be reduced.

Question 6.

Which of the following is a symptom of overdirecting?

a. Poor esprit de corps

b. Indecisive behavior by subordinates

c. Confusion of unit goals

d. Uncoordinated objectives

Question 7.

Which of the following actions by a Midshipman Regimental Commander could best be described as directing?

a. Preparing a list of primary goals of the Regiment

b. Recommending to the Brigade Commander that the Regimental staff be increased

c. Delegating to one of his assistants the authority to ensure that reports of athletic participation are received from the battalions on time

d. Writing a memorandum to each Battalion Commander stating the time and place for formation and the route to be followed in marching to the stadium

PROGRESS CHECK ANSWER AND REMEDIATION FORM

PART Five SEGMENT VIII

REMEDIATION TEXT Audio Script - Volume V-B

ITEM	ANSWER	REMEDIATION REFERENCE
1	c	Pages 1-4
2	b	Page 2
3	b	Pages 7-10
4	c	Pages 11-13
5	a	Pages 11-13
6	a	Pages 12-13
7	d	Pages 1-2
8		
9		
10		
11		
12		
13		
14		
15		

PROGRESS CHECK ITEM AND OBJECTIVE MATRIX

MARCH 1971

Part Five Segment VIII

ITEM NO.	T. O.	E. O.
1	1	
2	1	1
3	2	
4	5	
5	4	
6	5	
7	6	1
8		
9		
10		

PART 5 SEGMENT VIII

T. O. Number	TEST ITEM
1	Select the statement which best describes the act of directing. The act of directing will: a. test the accuracy and completeness of prior estimating. b. assist planning and organizing by feedback. c. test the need for revising any or all of the prior management actions. d. all of the above. Correct answer: d

REVISION_____DATE:

PART 5 SEGMENT VIII

T. O. Number	TEST ITEM
1	Directing is important to military management because it is concerned with converting plans to: a. goals b. action c. objectives d. projects Correct answer: b

REVISION_____DATE:

PART 5 SEGMENT VIII

T. O. Number	TEST ITEM
1	A destroyer is about to come alongside an AFS to receive fresh and frozen provisions, consumables, and repair parts. The XO and the Supply Officer have prepared a plan for the necessary working parties, location of personnel, and routes to be used for striking the expected materials below. Which of the following criteria is a requirement for directing this task? a. There is some sense or reason for carrying out the plan. b. Human and physical resources must be available. c. Subordinates must be able to perform the task. d. All of the above Correct answer: d

REVISION_____DATE:

T. O. Number	TEST ITEM
3	Assume that a Division Officer finds low morale, low job interest, and little productivity in one of his men. Which of the following statements describes the best corrective action? a. The Division Officer calls in his leading PO and gives the PO more responsibility. b. The Division Officer gives the man extra perquisites. c. The Division Officer sends a memo to the subordinate to come and see him immediately. d. The Division Officer attempts to restore the man's self-concept and to give him a sense of belonging. Correct answer: d

REVISION_____DATE:

PART 5 SEGMENT VIII

T. O. Number	TEST ITEM
3 EO - 1	A division officer can motivate his men if he is able to communicate with them concerning their needs. Which of the following actions represents this type of motivation? a. Reduce the responsibilities of your men. b. Adopt a policy of at least one personal talk with every man every month. c. Inform your men that problems in their work might be solved by a transfer to a new division. d. All of the above. Correct answer: b

REVISION_____DATE:

T. O. Number	TEST ITEM
3 EO - 2	A Division Officer who frequently appears before a formation carrying a copy of the MCM has a faulty understanding of: a. creating the proper environment. b. his legal authority. c. motivation. d. all of the above. Correct answer: d

REVISION_____DATE:

PART 5 SEGMENT VIII

T. O. Number	TEST ITEM
2	In which situation is oral communication most appropriate? a. The CO grants shore leave to a sailor. b. The CO announces a personnel change in the Weapons Department. c. The CO orders the ship to head for Honolulu. d. The CO issues an order to rescue a man overboard. Correct answer: d

REVISION_____DATE:

PART 5 SEGMENT VIII

T. O. Number	TEST ITEM
2	An organization that is as active and dynamic as the Navy often requires the use of oral directives. Identify the situation in which oral communication is inappropriate. a. In time of emergency. b. In a face-to-face leadership situation. c. When one person or component is involved. d. When the action is recurring. Correct answer: d

REVISION_____ DATE:

PART 5 SEGMENT VIII

T. O. Number	TEST ITEM
6 EO-1	Which of the following actions by the Midshipmen Regimental Commander could best be described as directing? a) Preparing a list of primary goals of the Regiment. b) Recommending to the Commandant that the Regimental staff be increased. c) Delegating to one of his assistants the authority to ensure that reports of athletic participation are received from the battalions on time. d) Writing a memorandum to each Battalion Commander stating the time and place for formation and the route to be followed in marching to the stadium. Correct answer: d

REVISION_____DATE:

Question 31.

Which of the following statements BEST defines directing?

a. Directing is the dynamic function of providing a means of recording and analyzing job functions and degrees of responsibility in order to achieve objectives.

b. Directing is the dynamic function of applying corrective measures so that performance takes place in accordance with plans and achievement of objectives.

c. Directing is the dynamic function of converting plans and decisions into purposeful action in order to provide a bridge between preparation of plans and achievement of objectives.

d. Directing is the dynamic function of converting performance of subordinates and decisions into achievement of objectives in accordance with plans developed.

Answer: c Ref: VIII.A.1.

Question 29.

Select from the following choices the needs of work groups which are central to motivation.

a. Coordination, cooperation, opportunity, and security

b. Controlling, standards, coordination, and recognition

c. Opportunity, belonging, security, and standards

d. Security, recognition, belonging, and opportunity

Answer: d Ref: VIII.B.3.c.

Question 21.

Which of the following statements BEST describes over-directing?

a. PO Blister delivers a lengthy lecture to his men regarding newly instituted procedures to be followed during fire drill.

b. ENS Backstay combines the organizing process and other managerial functions in preparing his fire control team for an exercise.

c. ENS Flemish provides instruction, in great detail, to his men for every task assigned.

d. ENS Furl continuously checks the progress of his division which is responsible for preparing for a "change of command" ceremony.

Answer: -c Ref: VIII.C.2.b.

Question 32.

Select the statement which describes the leaders role in the directing function.

a. Leaders who delegate authority must exercise control over actions taken under the authority so delegated.

b. It is impossible for a superior to do all the necessary directing; therefore, it becomes necessary to delegate to subordinates authority to issue orders as necessary to take corrective action.

c. Directing involves adjusting managerial style to the objectives of the organization, the capacities of subordinates, and the personality of the person directing.

d. Proper implementation of the directing processes in combination with other managerial functions will result in harmony of goals and objectives between the men and the organization.

Answer: c Ref: VIII.c.3.

United States Naval Academy

INTRODUCTION TO PSYCHOLOGY AND LEADERSHIP

PART FIVE

MILITARY MANAGEMENT

Segment IX

Controlling

Progress Check

WESTINGHOUSE LEARNING CORPORATION

Annapolis, Maryland

1971

CONTROLLING

PROGRESS CHECK

Question 1.

Select the statements which describe the importance of controlling to military management.

1) Controlling enables subordinates to identify trends, thus affording guides for further action.

2) Controlling allows the manager to help fulfill his role by measuring progress toward achieving organizational goals and objectives.

3) Controlling is a continuous process which allows the manager to maintain his knowledge of the overall activity.

4) Controlling is the function of evaluating performance of subordinates in order that appropriate disciplinary measures may be identified as a guide for future action.

a. 1 and 3

b. 2 and 4

c. 2 and 3

d. 3 and 4

Question 2.

From the following statements select those which are characteristics of a control system.

1) Controls should report deviations promptly

2) Controls should eliminate the problems associated with unexpected deviations.

3) Controls should indicate corrective action.

4) Controls should point up areas of strategic interest which have been neglected.

5) Controls should be objective and flexible.

6) Controls must reflect leadership potential regarding the needs of the activity.

a. 1, 3, and 5

b. 1, 2, and 6

c. 2, 4, and 6

d. 2,3, and 5

Question 3.

LTJG Woodward was the Supply Officer aboard the USS Kensington. Whenever the ship loaded supplies, they were consistently distributed inaccurately or late. The Captain often asked LTJG Woodward where all the supplies had gone, but frequently Woodward could not produce a satisfactory answer.

Select the paragraph which best explains the corrective steps LTJG Woodward should employ in controlling his department.

a. LTJG Woodward should establish goals against which actual results can be measured. He should measure his group's performance against the performances of all other departments on ships of comparable size. LTJG Woodward should insure that minor adjustments are made to change the goal orientation of the organization.

b. LTJG Woodward should establish standards which will determine the abilities of the individuals under his supervision. He should establish measurement standards of performance which will insure that work is accomplished in an efficient manner. LTJG Woodward should institute an external auditing system which will prove the effectiveness of his department.

c. LTJG Woodward should establish standards against which actual results can be measured. He should institute internal budget, audit and statistical programs which will facilitate maintaining better supply procedures. He should compare the actual performance with established standards and take further corrective action if performance deviates from standards.

d. LTJG Woodward should establish standards which will identify specific deficiencies among his men. He should take disciplinary action against those men holding back the group's performance. LTJG Woodward should institute measures directed at lifting morale and stabilizing goal orientation.

Question 4.

MIDN 1/c Knilak informed his plebe platoon at the beginning of the plebe summer indoctrination that they were going to be the best shooting, best marching, most physically fit platoon at the end of plebe summer. He informed the platoon that in order for them to accomplish this goal, they would have to:

1) Qualify over 95% with the rifle and pistol

2) Conduct drill competition without making any mistakes

3) Have 100% with passing scores on all physical fitness tests

4) Be prepared to put in extra hours of effort

5) Hold extra snapping-in instruction for weak shooters

6) Have early morning cross country for the physically weak

Select the standards which will aid in mission accomplishment.

a. 1, 5, and 6

b. 1, 2, and 3

c. 2, 3, and 6

d. 1, 2, and 4

Question 5.

LT Jason's division of the Air Department was involved in aircraft maintenance. The crew was required to generally inspect fifteen aircraft daily. Tire changes were to take no more than one hour if the plane was not to fly again that day. Otherwise the time required was half an hour. On a given day in which all aircraft were to fly again, the repair crews inspected twenty aircraft and took forty-five minutes to change an aircraft tire.

Select the statement which correctly describes the comparison of the performance with the standards.

a. LT Jason's section performed within an acceptable deviation factor of the standards.

b. LT Jason's section performed in accordance with the standards.

c. LT Jason's section did not perform in accordance with established standards.

d. LT Jason's section performed in accordance with standards in one case, but not the other.

Question 6.

LT Nelson was directed by his CO to conduct a staff study to determine the enemy's capability of infiltrating personnel into South Vietnam by sea routes. As LT Nelson began to organize his research in the study, it became more and more obvious that the staff study needed some specific limiting parameters in order to meet the imposed deadline of the CO.

Select the statement which indicated the most appropriate and logical action for LT Nelson to take.

a. LT Nelson should carry on with the study, limiting the staff study by his own assumptions and simply do the best job possible in the time available.

b. LT Nelson should request his Commanding Officer to relieve him of the responsibility for the staff study since the scope of the study goes beyond his own expertise.

c. LT Nelson should recommend to his Commanding Officer, before commencing to write the study, that the staff study be narrowed (limited) to cover only a specific area of South Vietnam.

d. LT Nelson should simply continue the study and just before the deadline inform his Commanding Officer of the extent of his study and request additional time to complete the task.

Question 7.

ENS Foxball was assigned to the USS Scott as the B Division Officer. This was his first assignment aboard a ship. On the fifteenth day at sea two forced draft blowers broke down. ENS Foxball began to supervise the repair operation. After attempting three different approaches to the problem, he requested the assistance of LT Dunlap, the Chief Engineer.

Select the paragraph which correctly states the deficiency ENS Foxball possesses and specifies the appropriate solution to correct the deficiency.

a. ENS Foxball cannot perform the task because of inadequate feedback. The boilermen under his supervision are not qualified to offer constructive suggestions. The solution is to provide further training for the boilermen.

b. ENS Foxball cannot perform the task because of a lack of knowledge on his part. ENS Foxball should seek to improve his professional knowledge by discussing his duties and likely problem areas with more experienced officers aboard ship.

c. ENS Foxball cannot perform the task because he lacks sufficient motivation based on his experience. He does not realize the importance of the problem and should be made immediately aware of its consequences.

d. ENS Foxball cannot perform the task because his other responsibilities as B Division Officer inhibit him. He should delegate appropriate authority to his CPO so that his full attention may be directed toward the repair operation.

Question 8.

From the following examples select the one which demonstrates overcontrolling.

a. ENS Hamilton, the E Division Officer, was informed by the Chief Engineer that all circuits aboard the ship would be checked daily. In addition, he was to prepare a parts sheet each day which listed those parts which were utilized in repair situations.

b. LT Aubrey was instructed to drill his men whenever he thought it was necessary. LT Aubrey drilled them once weekly.

c. LTJG Arnold was officer-in-charge of a study group analyzing the effectiveness of PBR boats in eliminating Viet Cong infiltration. He was presented with 400 pages of unassimilated data, but later discovered he needed more information.

d. LT Larsen instituted a zero-defects program in his unit. The personnel were now required to employ doublecheck techniques.

Question 9.

ENS Collins was the Supply Officer aboard the USS Carson. He allowed his personnel to issue equipment to the crew without written receipts. Issuing procedures became largely disorganized and frequent arguments erupted among the men regarding respective responsibilities.

Select the statement which is an implication of undercontrolling as illustrated in the foregoing situation.

a. Undercontrolling probably leads to more rapid accomplishment of the mission.

b. Undercontrolling can lead to complementary controls which counteract indirect effects.

c. Undercontrolling is necessary when mission objectives are flexible.

d. Undercontrolling may result in a permissive atmosphere leading to conflicting goals and a breakdown in morale and discipline.

Question 10.

Select the statement which describes the importance of reports to controlling.

a. Reports are important to indicate the leadership potential of subordinate personnel.

b. Reports are important to establish goal preferences among the personnel engaged in the mission.

c. Reports are important to summarize and communicate conclusions of measurement, and to reveal the status of a situation.

d. Reports are important because they inform a leader's superiors of the necessity for cost analysis.

PROGRESS CHECK ANSWER AND REMEDIATION FORM

PART Five SEGMENT IX

REMEDIATION TEXT Audio Script - Volume V-B

ITEM	ANSWER	REMEDIATION REFERENCE
1	c	Pages 1-5
2	a	Pages 3-5
3	c	Pages 2-6
4	b	Pages 2-6
5	d	Pages 6-9
6	c	Pages 6, 9-11
7	b	Pages 12-14
8	a	Pages 16-18
9	d	Pages 16-18
10	c	Pages 19-21
11		
12		
13		
14		
15		

PROGRESS CHECK ITEM AND OBJECTIVE MATRIX

MARCH 1971

Part Five Segment IX

ITEM NO.	T. O.	E. O.
1	1	
2	2	
3	3	
4	4	
5	5	
6	6	
7	7	
8	8	1
9	9	
10	10	

Question 8.

Which of the following are two of the basic steps in the controlling system?

a. Measure performance and compare actual performance with standards.

b. Establish performance and take corrective action if standards established are not in accord with mission goals.

c. Establish performance and measure performance.

d. Compare actual performance with standards and take corrective action if standards established are not in accord with mission goals.

Ans. a, Ref. 5.9, TO-6/EO-6

T. O. Number	TEST ITEM
1 (EO-1)	Select the statement below which correctly describes the purpose of controlling. a. The purpose of controlling is to maintain organizational activity at a level which exceeds the standards of performance which have been established by the organizational leaders. b. The purpose of controlling is to insure that performance takes place in accordance with plans and organizational objectives. c. The purpose of controlling is to limit the activities of those personnel whose performance deviates from the established standards of the organization. d. The purpose of controlling is to allow the manager to maintain a high level of awareness concerning the plans and objectives of the organization. correct answer: b
	REVISION_____DATE:

T. O. Number	TEST ITEM
3	LTJG Wright was officer-in-charge of the out-patient processing section at White Naval Hospital. It was his responsibility to process all the personnel and medical records of patients being discharged from the hospital. LTJG Wright allowed his personnel to take time off during duty hours to accomplish personal business. Out-patients were generally held over for two or three days. Select the paragraph below which best explains the corrective steps LTJG Wright should employ in controlling his section. a. LTJG Wright should establish standards which will determine those personnel who are most effective. After making this determination he should allow only those individuals to conduct personal business during duty hours. b. LTJG Wright should establish standards against which actual results can be measured. He should establish measurement standards of performance which will ensure that work is accomplished in an efficient manner. He should not permit personnel to conduct personal business during duty hours unless all official business has been completed. c. LTJG Wright should administer a test which will determine the technical abilities of his personnel. He should also establish measurements
	REVISION_____ DATE:

T. O. Number	TEST ITEM
3	of performance. If this does not work LTJG Wright should be prepared to enforce strict military discipline. d. a and b correct answer: b
	REVISION_____DATE:

PART SEGMENT

T. O. Number	TEST ITEM
4	LT Wilhelm commanded a reconnaissance platoon. Major Reynolds briefed him on his platoon's next mission. The platoon was to be dropped into an enemy base area to gather intelligence information. LT Wilhelm issued a list of standards of achievement. 1. Move covertly and fire your weapons only in extremis. 2. Call in medical choppers if anyone is wounded. 3. Cover at least five miles a day for four days. 4. Radio in all data which is of importance. Select the standards that, if accomplished, will aid mission accomplishment. a. 1 and 2 b. 2 and 3 c. 1 and 3 d. 3 and 4 correct answer: c

REVISION_____DATE:

PART 5 SEGMENT IX

T. O. Number	TEST ITEM
5	LTJG Watts, assigned to the 1st ANGLICO and serving with an Army unit along the coast of South Vietnam as a naval gunfire spatter, had established a personal standard of taking no more than five minutes to adjust naval gunfire onto the targets of opportunity that appeared within his sector. The Army unit had begun to expect this type of naval gunfire support as normal. When a different destroyer was assigned to support the area, the destroyer Captain and Gunnery Officer agreed that safety considerations made LTJG Watts five minute standard a little un-realistic. There was initially some concern in the Army unit that naval gunfire had deteriorated when a naval gunfire mission took 10 minutes to get into fire for effect. Select the statement below which correctly describes the comparison of the performance with the standard the Army expected. a. The performance of the initial naval gunfire support ship was within the standard established by LTJG Watts. b. The performance of the second naval gunfire ship was within the standard established by the ship's Captain and Gunnery Officer.

REVISION_____DATE:

T. O. Number	TEST ITEM
6 (EO-4)	Select the example below which describes the step of comparing performance with standards. a. ENS Wiley's repair section corrected their previous mistakes by increasing their duty hours. b. LTJG Denblayker instituted a new budgetary program in addition to adapting the auditing practices of his supply section. c. LT Kehoe initiated a quality control system into the activities of his Seabee unit. d. LTJG Mitchell changed his units' organizational standards to conform with the advanced standards of other PBR sections. correct answer: c
	REVISION_____ DATE:

T. O. Number	TEST ITEM
7 (EO-2)	From the examples below select those that describe deficiencies in performance. 1. LTJG Hunt (CEC) was placed in charge of a surveying team. The team was directed to survey a waterfront area slated for construction as an LCU Ramp. LTJG Hunt surveyed half of the area and arrived at the figures for the remainder by linear projection. 2. ENS Braen, an intelligence officer, was assigned the task of determining the most likely means the enemy would employ to sabotage ships anchored at Pier 16. ENS Braen wrote a detailed ten page report which failed to mention the possibility of underwater demolition teams. 3. LT Ashton was the Engineering Officer aboard the USS Ozbourn (DD-846). His primary responsibility was to plan and coordinate the operations of the divisions under his supervision. LT Ashton's wife had recently asked him for a divorce and he had delegated most of his authority to LTJG Thompson, a new officer aboard ship. The Engineering Department soon was in a disorganized state. 4. LTJG Cromwell, an F-8 pilot, was on a bombing and strafing mission in support of ground troops. It was the first mission in support of ground troops and was the first combat mission he had flown at night. When he began to receive anti-aircraft fire LTJG Cromwell failed to take the necessary evasive action and his aircraft was downed. a. 1 and 3 b. 2 and 4 c. 1 and 2 d. 3 and 4 correct answer: a

REVISION_____DATE:

T. O. Number	TEST ITEM
8	Marine Captain Gallagher commanded a rifle company in Quang Ngai province. He instructed his platoon leaders to report all suspicious movements or situations to him immediately. This was to be done before taking any action in response to the suspicions. Select the statement below which describes a possible implication of over controlling. a. The subordinate leaders will react in such a way as to increase their efficiency and effectiveness. b. The time and cost factors may increase the overall effectiveness of the organization. c. Negative reactions may occur causing discipline and morale to be reduced. d. Positive reaction will result since tightening control requires stricter discipline. correct answer: c
	REVISION_____DATE:

PART 5 SEGMENT IX

T. O. Number	TEST ITEM
9 (EO-1)	From the examples below select the one which is an example of under controlling. a. ENS Richards' repair division operated on a 24 hour schedule. ENS Richards had three CPO's supervise for eight hours each. He was on duty during one shift and frequently inspected the section during his off duty hours. b. LTJG Carson supervised a road construction project. The road had to be raised to prevent flooding during the monsoon season. This required extensive use of gravel and soil cement. LTJG Carson inspected the first 100 feet of the road to make sure the mixture was correct. He then assumed the rest was also correct. c. LT Condon was officer-in-charge of a PBR section. He instructed his boat commanders to make hourly situation reports. Reports of other activity were to be reported promplty and before the hourly SITREP. d. a and c correct answer: b
	REVISION_____DATE:

T. O. Number	TEST ITEM
10 (EO-1)	Select the statement below which correctly describes the need for a balance between timing and accuracy in reports. a. It is necessary to balance timing and accuracy so that simplicity is maintained while presenting key comparisons. b. It is necessary to balance timing and accuracy so that one requirement is not satisfied at the expense of the other, thus invalidating the report. c. It is necessary to balance timing and accuracy in order to represent the situation in light of all the variables. d. It is important to balance timing and accuracy in order to take into account the preferences of the receiver. correct answer: b
	REVISION_____DATE:

T. O. Number	TEST ITEM
10 (EO-3)	From the list below select those statements which are characteristics of a good report. 1. Subjective 2. Clear and easily understood 3. Indicates fact, not reasons why 4. Informative a. 1 and 3 b. 2 and 4 c. 2 and 3 d. 3 and 4 correct answer: b
	REVISION_____DATE:

T. O. Number	TEST ITEM
2	From the list of statements below select those that are characteristics of a control system. 1. Controls should be economical. 2. Controls should be subjective. 3. Controls should reflect leadership patterns. 4. Controls must reflect the nature and the needs of the activity. 5. Controls should point up exceptions at strategic points. 6. Controls should report deviations weekly. a. 1, 3, and 5 b. 2, 4, and 6 c. 3, 5, and 6 d. 1, 4, and 5 correct answer: d
	REVISION_____ DATE:

Question 3.

Keeping a log primarily serves which of the following management functions?

a. Coordinating

b. Directing

c. Controlling

d. Organizing

Answer: c Ref: IX.A.

Question 19.

Which of the following statements BEST defines controlling?

a. Controlling is the function of measuring performance and pinpointing reasons for deviations so that all differences in opinion can be resolved and all details become integrated.

b. Controlling is the function of evaluating performance and converting plans into purposeful action in order to achieve organizational objectives.

c. Controlling is the function of evaluating performance of subordinates and applying corrective measures so that performance takes place in accordance with plans.

d. Controlling is the function of coordinating evaluations in order to convert plans and decisions into purposeful action in accordance with plans and organizational objectives.

Answer: c Ref: IX.A.1.

Question 10.

Select the BEST choice of the statements given below.

A good management control system should:

1) Reflect the nature and needs of the activity

2) Report even the slightest deviations promptly

3) Point up exceptions as strategic points

4) Be rigid

5) Be economical

6) Indicate corrective actions

a. All of the above

b. 1, 2, 3, 4 and 6

c. 1, 3, 5 and 6

d. 1, 2, 5 and 6

Answer: c Ref: IX.B.

Question 39.

Which of the following BEST illustrates the characteristics of a control system?

a. ENS Batten establishes control by defining lines of formal authority and responsibility, by requiring that deviations be reported promptly, that controls be objective, and that the controls used be coordinated.

b. ENS Becket establishes control by defining regulations and standard operating procedures, by determining manpower requirements, by ensuring that controls are objective and flexible.

c. ENS Beacon establishes control by ensuring that the nature and needs of his unit are reflected in his control system, that deviations are reported promptly, and that controls are economical and understandable.

d. ENS Bean establishes control by clarifying authority relationships, instilling a set of beliefs in subordinates, and explaining the reasons and purpose for directions.

Answer: c Ref: IX.B.

Question 2.

Which of the following examples sets forth the basic steps in controlling during general quarters drill?

a. Time the ship's crew to determine performance level, measure performance during drill, take corrective action, establish standards for future performance.

b. Compare latest performance with established standards, measure performance during current drill, take corrective action.

c. Establish standards for performance, measure current performance, compare actual performance with established standards, take corrective action if performance deviates from standards.

d. Establish standards for performance, compare latest performance against established standards, take corrective action to improve performance, measure current performance and correct again if necessary.

Answer: c Ref: IX.C.

Question 4.

With respect to the basic step of establishing standards in a controlling system, select the statement which does not apply to this step.

a. Standards are established against important outcome characteristics and the level of achievement required.

b. Standards of performance are established to determine the ability of individuals and units to perform effectively by tests.

c. Since the unit commander is responsible for the results, he should specify and establish the necessary standards.

d. Controlling is expedited by concentrating on the exceptions, or outstanding variations, from the expected result or standard.

Answer: d Ref: IX.C.1.

Question 9.

The management function of monitoring expenditures for consumable supplies in relation to budget limits falls under which basic step of the controlling system?

a. Span of control

b. Comparison of performance with standards

c. Development of time-management systems

d. Coordinating

Answer: b Ref: IX.C.3

Question 14.

One of the management charts in electronic maintenance shows a steady decline of the percentage of radios in commission over the last four months.

Using your knowledge of leadership and effective management, pinpoint the key observation among the following statements.

a. The Electronic Maintenance Officer is receiving feedback but is not applying adequate corrective measures.

b. The Electronic Maintenance Officer is using a control instrument to measure progress in achieving organizational goals and objectives.

c. The chart is providing part of an historical record.

d. A chart using percentages is not as effective a control device as are those using discrete units.

Answer: a Ref: IX.C.4.

Question 25.

ENS Camber has been informed by his department head that the performance of his division is not up to the standards of cleanliness set forth in the ship's directives.

Which of the following functions would ENS Camber perform to improve performance in his division?

a. Implement an incentive plan for his division to achieve the standards set forth in the ship's directives

b. Establish better communications between all echelons within his division to achieve standards set

c. Establish standards and compare performance with standards by concentrating on the exceptions or variations

d. Take corrective action to ensure that performance is improved to meet the standards set forth in the ship's directives

Answer: d Ref: IX.c.4.

CUMULATIVE POST-TEST

SEVEN

Question 1.

SN Broach has been noted to have certain performance deficiencies by his division officer. As his division officer, select the proper solutions for the deficiencies noted.

Deficiency	Solution
1. Lack of motivation	A. Provide adequate information
2. Task interference	B. Institute a bonus system
3. Performing oppressive tasks	C. Develop time-management systems
4. Inadequate feedback	D. Raise incentives

a. 1-B, 2-C, 3-D, 4-A

b. 1-B, 2-D, 3-A, 4-C

c. 1-A, 2-B, 3-C, 4-D

d. 1-D, 2-C, 3-B, 4-A

Answer: d Ref: IX.D.1.

Question 12.

In the assessment of individual deficiencies in performance, match the cause of the deficiency in Column A with the appropriate remedial action in Column B.

Column A	Column B
1) Lack of knowledge	V. Raise individual's incentive
2) Lack of feedback	W. Develop time/management system
3) Task interference	X. Create an equally distasteful alternative or institute a bonus system
4) Performance of grueling, oppressive tasks	Y. Give training
5) Lack of motivation	Z. Give information on individual's performance

a. 1-W, 2-Y, 3-Z, 4-X, 5-V

b. 1-Y, 2-Z, 3-W, 4-X, 5-V

c. 1-W, 2-Y, 3-Z, 4-V, 5-X

d. 1-W, 2-Z, 3-Y, 4-V, 5-X

Answer: b Ref: IX.D.1.

United States Naval Academy

INTRODUCTION TO PSYCHOLOGY AND LEADERSHIP

PART FIVE

MILITARY MANAGEMENT

Segment X

Coordinating

Progress Check

WESTINGHOUSE LEARNING CORPORATION

Annapolis, Maryland

1971

COORDINATING

PROGRESS CHECK

Question 1.

Select the most accurate description of the relationship between coordinating and the other management functions of planning, organizing, directing, and controlling.

a. Coordinating is synonymous with cooperation and is equally weighted in a hierarchy of importance with other management functions.

b. Coordinating integrates the other management functions to efficiently meet the stated objective.

c. Coordinating ensures equal participation of all management team members.

d. Coordinating guarantees the autonomy of all participants in a mission.

Question 2.

One member of a squadron commander's staff has the job of preparing anti-submarine exercises. Coordination would require which of the following?

a. The staff plans all aspects of the activity and then informs support and unit commanders of their duties.

b. The staff turns all planning over to a committee of support and unit commanders chosen by vote of these commanders.

c. The staff turns planning, organization and direction over to the submarine commanders.

d. The staff involves support units and submarine commanders in planning, organizing and directing the operation from the beginning.

Question 3.

Units from a Naval Air Station are to participate in a series of complex training exercises along with Air Force units operating from different regional areas. Coordinating the common use of bases by elements of all units would involve which type of coordination?

a. Command

b. Staff

c. Liaison

d. All of the above

Question 4.

An important liaison coordination principle states that "supporting units habitually establish liaison with supported units."

Select the best example of this principle.

a. Aircraft carriers that are part of the same fleet maintain liaison with one another.

b. The fleet commander maintains liaison with assigned aircraft carriers.

c. Service force task groups maintain liaison with task forces to which they are assigned.

d. None of the above

Question 5.

During a naval gunfire (NGF) training exercise the destroyer providing the fire support for the exercise was able to provide enough illumination (star shells) for the adjustment of only one night fire mission.

From the following statements which one best describes the failure in coordination and outlines what action should be taken to correct the deficiency?

a. There was a lack of coordination between the destroyer Weapons Officer and the naval gunfire teams ashore as to how much night firing was going to be expected. Liaison and staff coordinating should have clearly established the quantity and type of naval gunfire to be desired.

b. There was a failure on the part of the destroyer Weapons Officer to anticipate the requirements of the NGF teams ashore for night adjustment of fire. The Weapons Officer should modify his ship's instructions to always include an equal amount of illumination and HE for future exercises.

c. The Captain of the Destroyer failed to establish command liaison with the shore party to find out if firing was to be conducted at night. The Captain should ensure coordination with the Shore Party Commander to avoid any future discrepancies in fire support.

d. None of the above

Question 6.

An aircraft carrier Commanding Officer held a meeting of his key officers to develop an idea for a more efficient means of refueling carriers at sea. After concluding the meeting, a recommendation was prepared, signed by the Captain and then sent up the chain of command.

The coordination techniques used by the carrier CO in meeting with his key officers was:

a. Conference

b. Individual contact

c. Command initiative

d. Liaison man

Question 7.

The coordination of an amphibious operation involving air, sea, and land forces in an attack on a hostile beach would most likely involve which of the following coordination techniques?

a. Conference

b. Written correspondence

c. Liaison

d. All of the above

Question 8.

Coordination is important to military management because:

a. Coordination fosters cooperation, and cooperation is the single most significant factor in the success of a military manager.

b. Coordination resolves the individual differences between competing military units.

c. Coordinating, in military management, is the integrating of all details necessary to mission accomplishment.

d. Coordinating, in military management, allows the leaders to plan contingencies with a high degree of accuracy.

Question 9.

A consequence of poor coordination is:

a. Heightened awareness of the problem

b. Lack of unity of action

c. Increased individual initiative

d. Dual accomplishment of the same operation

PROGRESS CHECK ANSWER AND REMEDIATION FORM

PART Five SEGMENT X

REMEDIATION TEXT Audio Script - Volume V-B

ITEM	ANSWER	REMEDIATION REFERENCE
1	b	Pages 1-2, 11-13
2	d	Pages 1-4, 11-13
3	d	Pages 4-5
4	c	Pages 4, 8-9
5	a	Pages 4, 8-9
6	a	Pages 5-6
7	d	Pages 5-9
8	c	Pages 2-3, 11-12
9	b	Pages 12-13
10		
11		
12		
13		
14		
15		

PROGRESS CHECK ITEM AND OBJECTIVE MATRIX

MARCH 1971

Part Five Segment X

ITEM NO.	T. O.	E. O.
1	1	
2	1	1
3	2	
4	2	2
5	3	
6	4	
7	4	
8	5	
9	5	2
10		

Question 67.

To be effective, coordination should be:

a. Begun in the early stages of planning

b. Arranged after the other management functions are set

c. Started during the planning stage and not changed in any respect

d. Completed before the other management functions are set

Ans. a, Ref. 5.10, TO-5/EO-1

PART 5 SEGMENT X

T. O. Number	TEST ITEM
1 EO 1	The coordinating function is most accurately thought of as: a. The planning and directing of a program by a group of departmental supervisors. b. The decision-making process involved in program development. c. The development of channels of cooperation among members of a planning team. d. The unification and harmonization of all aspects of a mission. Correct answer: d

REVISION _____ DATE:

PART 5 SEGMENT X

T. O. Number	TEST ITEM
2 EO 1	The coordinating of shore patrol activities involves: a. Command coordiantion, but neither liaison nor staff coordination. b. Liaison coordination for planning and organizing. c. Staff coordination, but not command or liaison coordination. d. Command, staff, and liaison coordination. Correct answer: d

REVISION_____DATE:

PART 5 SEGMENT X

T. O. Number	TEST ITEM
2 EO 2	In the planning of a rendezvous engagement, the commanding officers of the ships involved consult about the integration of their individual schedules. This is an example of which type of military coordination? a. Liaison coordination. b. Staff coordination. c. Command coordination. d. All of the above. Correct answer: c

REVISION_____DATE:

PART 5 SEGMENT X

T. O. Number	TEST ITEM
2. EO3	An important liaison coordination principle states that "supporting units habitually establish liaison with supported units." Select the best example of this principle. a. Aircraft carriers that are part of the same fleet maintain liaison with one another. b. The fleet commander maintains liaison with assigned aircraft carriers. c. Refueling ships maintain liaison with aircraft carriers to which they are assigned. d. None of the above. Correct answer: c

REVISION_____DATE:

T. O. Number	TEST ITEM
2 EO 4	Staff coordination is one of the three types of military coordination. Which of the following examples represents staff coordination? a. The Medical Department and the Dental Department set up an integrated health program while each department maintains its independence as a unit. b. The Repair Officer submits his plan for making repairs to the Executive Officer. c. Naval and Marine units are scheduled to engage in a joint operation. The two commanding officers develop a joint plan of operation. d. None of the above. Correct answer: a

REVISION_____DATE:

PART 5 SEGMENT X

T. O. Number	TEST ITEM
4 EO 1	Plans are being developed in Washington for conversion of all aircraft carriers to nuclear power. To discuss this proposal and its execution, representatives from carrier commanders Naval Ships Systems Command, and staff of the Secretary of the Navy are brought together. The technique of coordination here represented is primarily: a. Written correspondence. b. Conference. c. Individual control. d. Group-to-group communication. Correct answer: b

REVISION_____DATE:

PART 5 SEGMENT X

T. O. Number	TEST ITEM
4 EO 2	Identify all the advantages of the conference technique of coordination. 1. It is a means of sampling a wide range of expert knowledge and experience. 2. It results in a high quality of coordination. 3. It enables a participant with a dynamic personality to persuade others to his viewpoint. 4. It is a means of shortening the lines of communication. 5. It is a means for participants to project their biases. 6. It is the least expensive coordination technique. a. 1, 2, 3, and 4 b. 3, 4, 5, and 6 c. 1, 2, 4, and 6 d. 1, 2, 5, and 6 Correct answer: c

REVISION_____DATE:

T. O. Number	TEST ITEM
4 EO 3	The following examples represent different types of coordination techniques. Select the one that involves individual contact. a. A midshipman company commander calls a meeting with the individual class groups within his company in order to develop a leadership program. b. A Navy liaison officer attached to a Marine research and development unit requests permission to report back to his naval unit information on new techniques and equipment that have not been sent through formal channels. c. A junior officer planning a visit to another naval unit sends a written communique to the unit concerned stating his intentions. d. All of the above. Correct answer: b

REVISION_____DATE:

PART 5 SEGMENT X

T. O. Number	TEST ITEM
4 EO 4	Ensign Pulenpas, a Plebe Summer Company Officer has contacted by phone the Naval Station's small craft department to arrange for boat transportation for his plebe company from the Academy to the rifle range at North Severn. Ens. Pulenpas talks to the duty PO and verifies that transportation can be provided. He then requests transportation be available at Santee Dock at the Academy a week from the date of his call. A week later a single boat arrived on time but it couldn't handle the entire company in one trip. When the end of the day arrived there were no boats to pick up the company. From the statements below select the one which identifies the deficiency and best specifies how to correct the coordination effort. a. Ens. Pulenpas talked to the wrong individual. He should ensure that the next time he talks only to the officer in charge. b. The problem appears to be in a lack of alertness on the part of the PO on duty. Ens. Pulenpas should ensure that the next time the PO reads back all the data given him. c. The problem was that Ens. Pulenpas did not outline exactly the who, what, when, where and why and the PO on duty did not exercise any initiative. Pulenpas should ensure that he doesn't make false assumptions the next time he effects coordination by phone. d. Ens. Pulenpas should have written out his message before telephoning and ensured that the message was delivered to the Officer in Charge requesting a return phone call from him. Answer: c

REVISION_____DATE:

PART 5 SEGMENT X

T. O. Number	TEST ITEM
4 EO 5	The best example of coordination from the planning stages through the execution phase is the Navy-Marine Corps amphibious assault, projecting combat power ashore against a hostile force. Considering this situation, select from the below choices those instances when a liaison officer should be used by the Navy. a. The Navy should assign a liaison officer to work with the Marine Force from the initiation of planning. b. If any allied forces are involved, the Navy should exchange liaison officers with them. c. If there is to be any special naval gunfire preparation, a liaison officer should be assigned to the specific units operating in the area being preped. d. All of the above. Answer: d

REVISION_____DATE:

PART 5 SEGMENT X

T. O. Number	TEST ITEM
5 (EO-1)	Coordination in organizing involves: a. Identifying the officers in authority. b. Developing an adequate and appropriate structure. c. Giving adequate attention to the goals of the program. d. All of the above. Correct answer: b

REVISION_____DATE:

PART 5 SEGMENT X

T. O. Number	TEST ITEM
5 (EO-1)	Coordinating in directing is: a. Related to the concept of absolute authority. b. Related to the concept of communication. c. Related to the established rules of the system. d. b and c above. Correct answer: b

REVISION_____DATE:

Question 30.

Which of the following statements BEST describes the relationship of coordination to the management process?

a. Coordination is the process through which all details are integrated to achieve harmony of individual efforts toward accomplishing organizational goals.

b. Coordination is that characteristic of management which ensures mutual help in order to accomplish organizational goals.

c. Coordination requires that instruments employed be clear, complete, and concise in achieving organizational goals.

d. Coordination is the essence of the management process; it follows the planning phase and consists of translating the plan to action and establishing criteria consistent with ultimate objectives.

Answer: a Ref: X.A.1
X.A.3.b.

Question 34.

This part of the management process is the integrating of all details necessary for the accomplishment of the mission. It ensures that all efforts are bent toward a common objective and that there is no duplication of work resulting in wasted effort. It also includes the resolution of differences of opinion.

Therefore, this part of the management process must be:

a. Planning

b. Coordinating

c. Organizing

d. Directing

Answer: b Ref: X.A.1.&2.

Question 22.

A dependent child on a picnic is lost in a nearby forest. It is already late in the afternoon so every man immediately volunteers to help, and each one quickly sets out to find the child.

Such a spontaneous and willing group effort shows:

a. Strong cooperation

b. Good individual understanding of the directive function of management

c. A strong individual appreciation of the organizing function of management among the searchers

d. Good coordination

Answer: a Ref: X.A.3.c.

Question 28.

Cooperation implies which of the following?

a. Mutual respect

b. Mutual initiative

c. Mutual help

d. Mutual directing

Answer: c Ref: X.A.3.c.

Question 40.

The management wheel depicts coordination as a function of:

a. Objectives

b. Organization only

c. Planning, organization, and controlling only

d. Planning, organization, directing, and controlling

Answer: d Ref: X.A.3.d.

Question 23.

Select the advantage which does not apply to the conference technique of coordinating.

a. Promotes high quality coordination

b. Facilitates sampling of expert knowledge and of a wide range of experience and opinion

c. Minimizes the effect any one individual can have on the action of the group

d. Provides multiple face-to-face contact of all persons concerned with a subject

Answer: c Ref: X.c.1.

Question 36.

Which of the following BEST describes when coordination by telephone or teletype communications should be used?

a. When precise figures or complicated details are involved

b. When it is not necessary to convey a sense of priority or importance regarding the task

c. When time is a critical element

d. When execution of the task will occur in the future

Answer: c Ref: X.c.2.b.

Question 17.

LTJG Leggin on reporting to his first shore duty is assigned as a Section Leader and is directed to reorganize his section.

Which of the following BEST describes the action he should take?

a. Examine the section organization chart with the leading petty officer (LPO) and reorganize the section in accordance with feedback received.

b. Examine the section organization chart. Meet individually with informal leaders in the section to discuss reorganization and then reorganize in accordance with these suggestions and the way other similar sections are organized.

c. Direct the LPO to revise the section organization chart based on his extensive knowledge of the section personnel.

d. Examine the section organization chart and hold a conference with his senior petty officers to develop a revised organization based on the identification and assignment of related activities, such as selection of the right man for the right job.

Answer: d Ref: X.D.

Question 6.

ENS Hoop has been directed to organize a basketball league. His first step was a planning step. If he adhered to good management processes the coordination step should:

a. Be before the planning step

b. Begin with the planning step

c. Begin with the controlling step

d. Begin after the organizing step

Answer: b Ref: X.D.1.b.

Question 13.

Upon receipt of a directive to prepare his division for a materiel inspection, ENS Cable develops an updated organization chart, identifies assignment of related activities, and selects the "right man for the job" and the "right job for the man."

Coordination of which of the following management functions is illustrated by ENS Cable's action?

a. Planning

b. Organizing

c. Directing

d. Controlling

Answer: b Ref: X.D.1.c.

Question 24.

Which of the following situations BEST illustrates coordinating in directing?

a. ENS Scope motivates his men by instilling in them a sense of importance which helps them implement goals which they seek.

b. ENS Bright directs corrective action toward discovering and rectifying the cause of a failure in order to ensure results which are consistent with expectations.

c. ENS Sheave establishes communications and defines relationships between himself and his men while performing assigned tasks.

d. ENS Parker develops an appropriate plan, identifies the assignment of related activities, and develops estimates relating to possible courses of action.

Answer: c Ref: X.D.1.d.